PRODUCT SHEET

Snap Frame Standard A2 Mitred Corners 25 mm Wood

KRA2G25LB

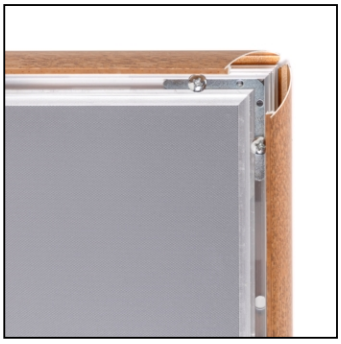

- **Cost effective, elegant display solution for A2 posters**
- **Quick poster replacement**
- **Over 20 variations available**

PRODUCT SHEET

Snap Frame Standard A2 Mitred Corners 25 mm Wood

KRA2G25LB

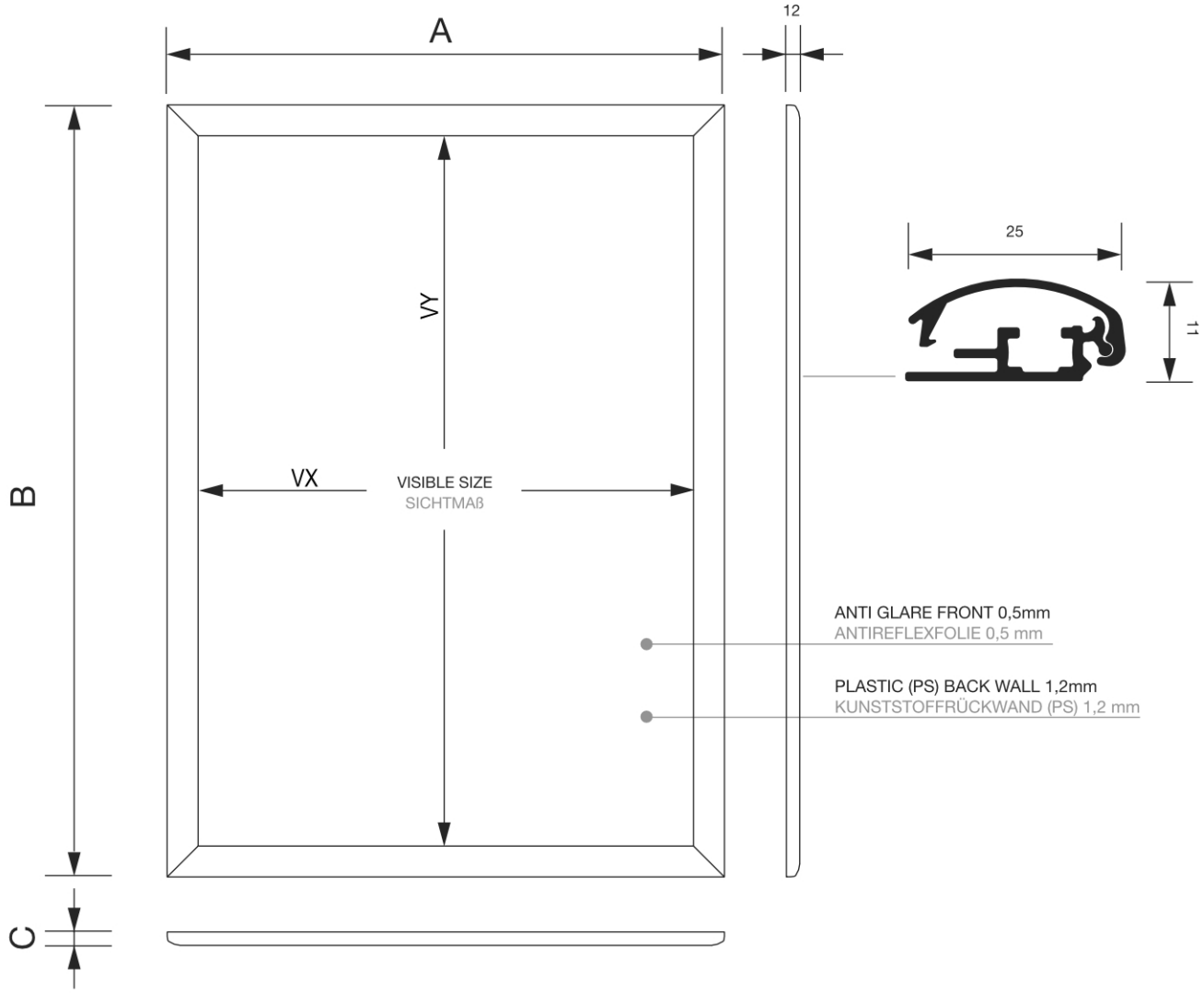

BACK VIEW
RÜCKANSICHT

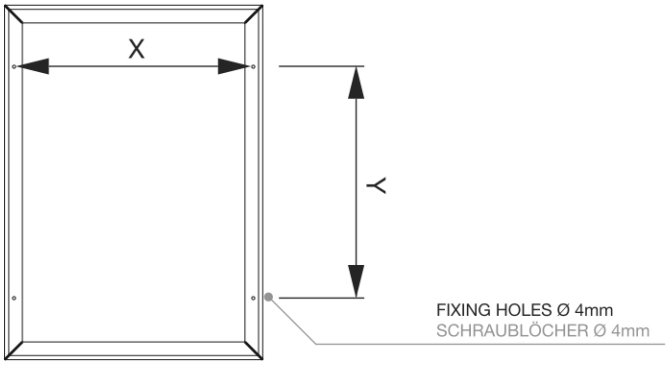

ACCESSORIES
ZUBEHÖR

(SOSSET)
SET OF SCREWS
SCHRAUBENSET

(KRHOOK)
HANGING HOOKS
HAKEN ZUM ABHÄNGEN

(HSKR)
HANGING SET
HÄNGESET

PRODUCT SHEET

Snap Frame Standard A2 Mitred Corners 25 mm Wood

KRA2G25LB

GENERAL INFO

SKU	Sizes (mm) (A x B x C)	Format (mm)	Visible size (mm) (VXxVY)	Hole spacing (mm) (XxY)
KRA2G25LB	451 x 625 x 11	A2 (420 x 594 mm)	401 x 575 mm	431 x 336 mm

Orientation	Weight (kg)
Vertical	1,03

PACKAGING INFORMATION

Packaging unit 1 (mm)	Packaging unit 2 (mm)	Packaging unit 3 (mm)
634 x 460 x 20	-	-

Palette number of pieces	Palette weight (kg)	Palette type
250	370	EUR

ADDITIONAL INFORMATION

Product certifications	EAN
No	8596052191459

SIZE GUIDE

Snap Frame Standard A2 Mitred Corners 25 mm Wood
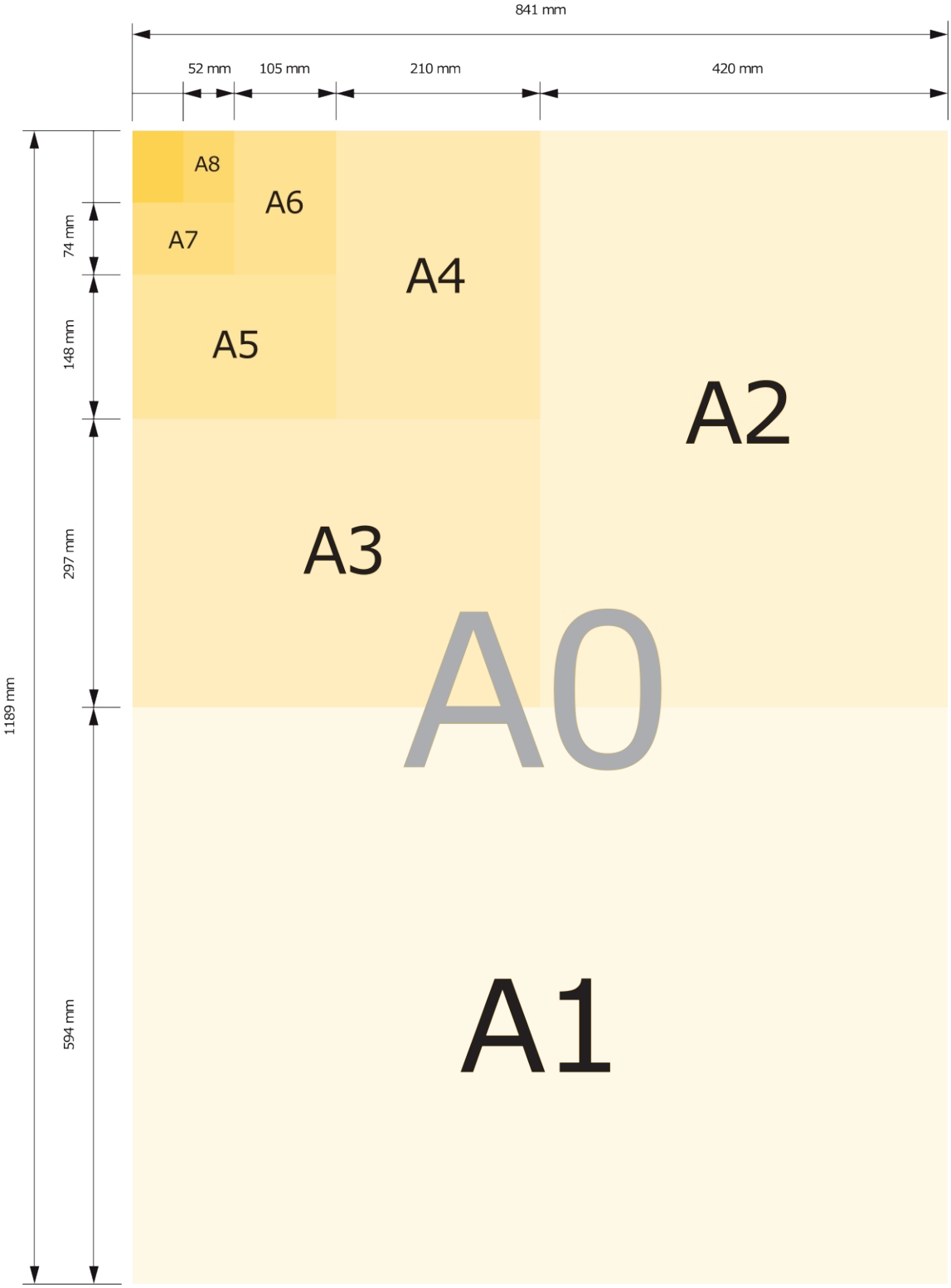
KRA2G25LB